Received: 12 November 2025 | Revised: 17 August 2026 | Accepted: 22 October 2026 | Published online: 27 November 2026

REVIEW

Journal of Optics and Photonics Research
2026, Vol. 00(00) 1–18
DOI: 10.47852/bonviewJOPR62028177

Photonics for Remote Sensing and Microwave Measurement Applications: A Review

R. P. Suhas[1], A. Arockia Bazil Raj[2], Nithya R. Gowda[3], T. Shanmugasundaram[3], Anwesha Satapathy[3], Kunal Tupe[4] and S. P. K. Babu[5,*]

[1] *Department of Electronics and Communication Engineering, National Institute of Technology, India*

[2] *Radar Systems Laboratory, Defence Institute of Advanced Technology, India*

[3] *Department of Metallurgical and Materials Engineering, Defence Institute of Advanced Technology, India*

[4] *Department of Electronics and Telecommunication Engineering, Pune Vidyarthi Griha's College of Engineering, Technology and Management, India*

[5] *Department of Electronics and Communication Engineering, Periyar Maniammai Institute of Science and Technology, India*

Abstract: Microwave photonics is presently a mature technology that has expansive bandwidth and high-speed capabilities, helping to overcome the limitations of electronic systems. This review provides a comprehensive analysis of the evolution and current state of radio frequency (RF)-photonic devices and systems, specifically focusing on two primary domains: remote sensing and microwave measurements. In the realm of remote sensing, we examine the architectures and principles of photonic radar, beamforming, light detection and ranging, and synthetic aperture radar, highlighting how optical true-time delay and ultra-wideband signal generation enhance resolution and operational robustness. The integration of artificial neural networks, including convolutional neural networks and generative adversarial networks, is explored as a vital tool for advancing the capabilities of the photonics-based remote sensing systems. In the field of microwave measurements, the paper details photonic-based methodologies for measuring instantaneous frequency, phase noise, power, and electric fields, emphasizing the advantages of electromagnetic interference immunity and low signal loss. Finally, we discuss the challenges of space-based integration and hardware complexity while outlining future directions for the field.

Keywords: microwave photonics, photonic radar, remote sensing, microwave measurements, artificial neural networks

1. Introduction

Microwave photonics explores the synergy between microwave and optical waves, leveraging photonics for the rapid generation, transmission, processing, and measurement of microwave signals. This harnesses the inherent speed and expansive bandwidth of modern photonics technologies [1]. The applications of microwave photonics span a wide spectrum, from enhancing electronic warfare (EW) capabilities to revolutionizing communication networks. Its impact extends to the realms of microwave signal processing, where intricate manipulation of signals becomes feasible, as well as radar systems and remote sensing, where the integration of microwave and optical technologies enhances the resolution and capabilities of sensing mechanisms [2, 3]. The rationale for opting for radio frequency (RF) photonics over RF electronics becomes evident when considering the advantages and distinctions outlined in Table 1. The benefits highlighted in the comparison underscore the superior characteristics of RF photonics, emphasizing factors such as higher bandwidth, reduced susceptibility to electromagnetic interference, lower signal loss, and enhanced security. These advantages collectively signify a more efficient and advanced solution for certain applications, justifying the preference for RF photonics in specific EW and communication systems. Microwave photonics offers several advantages in the field of communication and signal processing.

Table 1 shows the differences between RF electronics and RF photonics. These include high stability, wide bandwidth, low loss, and long-distance propagation capability [4–6]. The use of ultrashort pulses as optical carriers further enhances the capacity of microwave photonics systems [5, 7]. Additionally, the utilization of polarization-maintaining devices in photonics-based microwave generation ensures a high degree of linear polarization, enhancing system stability.

***Corresponding author:** S. P. K. Babu, Department of Electronics and Communication Engineering, Periyar Maniammai Institute of Science and Technology, India. Email: spkbabu@pmu.edu

© The Author(s) 2026. Published by BON VIEW PUBLISHING PTE. LTD. This is an open access article under the CC BY License (https://creativecommons.org/licenses/by/4.0/).

Table 1
Differences between RF electronics and RF photonics

Property	RF Electronics	RF Photonics
Signal transmission medium	Metallic conductors (e.g., coaxial cables or waveguides)	Optical fibers
Domain	Confined to electrical domain	Involves conversion from electrical to optical domain
Components used for signal processing	Electronic components (e.g., transistors)	Photonic components (e.g., lasers and modulators)
Bandwidth	Typically < 2 GHz for high-fidelity processing; severely restricted at high millimeter-wave bands (> 40 GHz).	Seamlessly scales past 100 GHz to sub-THz ranges using optical carrier frequencies.
Data rates	Constrained by the intrinsic limitations of electrical systems	Capable of supporting higher data rates than 100 Gbps per channel, easily scaling to multi-Tbps using Wavelength Division Multiplexing (WDM).
Electromagnetic Interference (EMI)	Susceptible to EMI	Naturally provides > 100 dB electromagnetic isolation; light signals are entirely unaffected by external RF fields.
Signal loss	Severe attenuation at microwave frequencies (e.g., > 1 dB/m or $\sim 1000 dB/km$ for coaxial cables at 10 GHz).	Negligible attenuation ($\sim 0.2 dB/km$ at 1550 nm in standard single-mode fiber).
Size and weight	Electronics components can contribute to larger size and may add weight. Example, coaxial cables and metal waveguides add substantial weight (~ 100–$500 g/m$).	Optical components are smaller and generally lighter in weight. Example, Hair-thin glass optical fibers add negligible footprint and weight (~ 1–$3 g/km$).
Security	Vulnerable to certain types of electronic eavesdropping	Optical signals can be more challenging to intercept
Immunity	May be susceptible to electronic warfare attacks	Offers improved immunity to certain electronic warfare threats
Flexibility	Installation may be constrained by the properties of electronic transmission	Optical fibers provide greater flexibility in installation, allowing for diverse configurations

Integrated microwave photonic technologies with ultra-high spectral resolution have been developed, enabling the processing of RF signals with fine spectral separation. Furthermore, the combination of re-configurable optical routing networks and independent optical true time delay units in microwave photonics beamforming architecture allows for dynamic combinations of antenna elements and simultaneous trans-mission or reception of RF beams from different directions. These advantages make microwave photonics a promising technology for applications in EW applications, wireless communications, telecommunication, radar, sensing, and signal processing.

2. State of the Art of Remote Sensing with Radio Frequency Photonic Systems

Photonics plays a crucial role in remote sensing applications, as evidenced by various research studies. Zalevsky et al. present a photonic sensor capable of remote and continuous estimation of vital bio-signs, molecular sensing of chemicals in the blood stream, and hemodynamic characteristics, enabling early disease diagnosis and efficient medical diagnosis capabilities [8]. Microwave photonics integrates photonics and microwave technologies for remote sensing, enhancing system performance with coherence, stability, and immunity to electromagnetic interference, benefiting applications like 5G networks and radars [7]. Furthermore, the development of highly compact silicon photonic modulators utilizing coupled Bragg grating resonators has significantly improved the efficiency of the optical-electrical interfaces required for these integrated remote sensing systems [9]. Additionally, Mellon et al. highlight the use of rapidly tunable photon orbital angular momentum (OAM) states to enhance free space optical applications, particularly in detecting concealed objects through preferential optical transmission channels [10]. Liu et al. demonstrate a photonic electric field sensor operating in a broad frequency range, showcasing remote electromagnetic spectrum sensing capabilities up to 70 km with high signal-to-noise ratios [11]. Eiselt et al. discuss the use of optical fibers as sensors and transmission mediums for remote sensing, achieving high spatial resolution without the need for a power supply [12]. These studies collectively emphasize the significant potential of photonics in advancing remote sensing technologies across various domains. Photonics integrated LiDAR system enhances earth science remote sensing by reducing cost, size, weight, and power. The system operates at 1572.335 nm for CO2 active remote sensing [12].

2.1. Photonic radar

Photonic radar is a type of radar system that leverages photonic (optical) technologies to generate, process, and transmit radio RF signals [13–15]. Unlike traditional radar systems that

rely entirely on electronic components, photonic radar uses optical methods to achieve high-frequency signal generation, wide bandwidth, low noise, and improved performance in various radar applications, including military, automotive, and aerospace. The principle behind photonic radar involves the generation, modulation, and processing of radar signals using photonic techniques. A key component is the use of optical components, such as lasers and modulators, to convert RF signals into optical signals and vice versa. These optical signals are then processed and transmitted, with the system relying on the unique properties of light to enhance radar performance. The basic block diagram of a photonic radar is given in Figure 1 [15].

A laser source is modulated by an intermediate frequency (IF) signal. Optical modulator (OM) produces sidebands which can be extracted as the required signal. The output is sent to an optical coupler (OC) where a part of it is given to the receiver. The main part is sent to the photo detector where it is converted to RF signal with less phase noise and high stability. The signal is amplified by a power amplifier (PA) before transmission. In the receiver, the optical phase modulator (OPM) along with the received signal amplified by a low-noise amplifier (LNA) does the demodulation and send the signal to photo detector (PD) where it is converted to RF domain. If a continuous wave (CW) radar is used, the relative velocity $v_r(t)$ of the target can be found out from the Doppler frequency f_d.

$$v_r(t) = \frac{f_d c}{2f_0} \tag{1}$$

where f_0 is generated frequency, c is the speed of the light. Range can be calculated from photonics pulsed radar or photonics frequency-modulated continuous-wave (FMCW) radar. In case of FMCW radar, the range can be calculated by

$$R = \frac{T_c c f_b}{2B} \tag{2}$$

where R is the range to the target, c is the speed of light, T_c is the chirp duration, f_b is the beat frequency and B is the bandwidth. The velocity can be calculated by

$$v = \frac{\lambda \delta \phi}{4\pi T_c} \tag{3}$$

where v is the relative velocity of the target, λ is the wavelength of the transmitted signal. Advantages of photonic radar are photonic radar that can operate over a broader frequency range than traditional electronic radar systems, allowing for better resolution and detection capabilities, optical components, such as lasers, exhibit lower phase noise compared to electronic oscillators, leading to more accurate target detection and characterization, optical signals are immune to electromagnetic interference, making photonic radar more robust in environments with high levels of RF noise, photonic radar systems can be easily integrated with existing fiber optic networks for signal transmission and processing over long distances with minimal loss. Applications include military and defense, automotive radar, aerospace, and telecommunications [16–19]. However, a key bottleneck in these architectures is the high insertion loss caused by low optoelectronic (O/E and E/O) conversion efficiencies. This often requires complex optical amplification chains, which can degrade the system's noise figure if not carefully managed [16].

2.2. Photonic beam forming

Photonic beamforming is a technique used in advanced radar, communication, and sensing systems that utilizes photonic (optical) technologies to control the direction and shape of an RF (radio frequency) beam. This is achieved by manipulating the phases and amplitudes of signals in the optical domain, allowing for precise control of the RF signals after they are converted back from the optical domain. Beamforming in phased array antennas can be done by controlling the phase of the input signal using phase shifters. It can also be done by photonics where controlled time delays are introduced by optical components to the converted optical signals. A block diagram illustrating the process is given in Figure 2 [20]. We see that RF signal is converted into optical signal by Mach-Zehnder modulator (MZM) which is always followed by a Erbium-doped fiber amplifier (EDFA) and split into number of signals equal to the number of antennas.

Photonic beamforming offers significant advantages over traditional electronic beamforming methods, such as broader bandwidth, lower loss, and higher resolution, making it ideal for applications in phased-array antennas, 5G/6G communications, and radar systems. The principle of photonic beamforming relies on the generation, distribution, and control of RF signals using optical components. A stable optical carrier is generated using

Figure 1
Basic architecture of a photonic radar system illustrating the optical and electrical signal processing stages

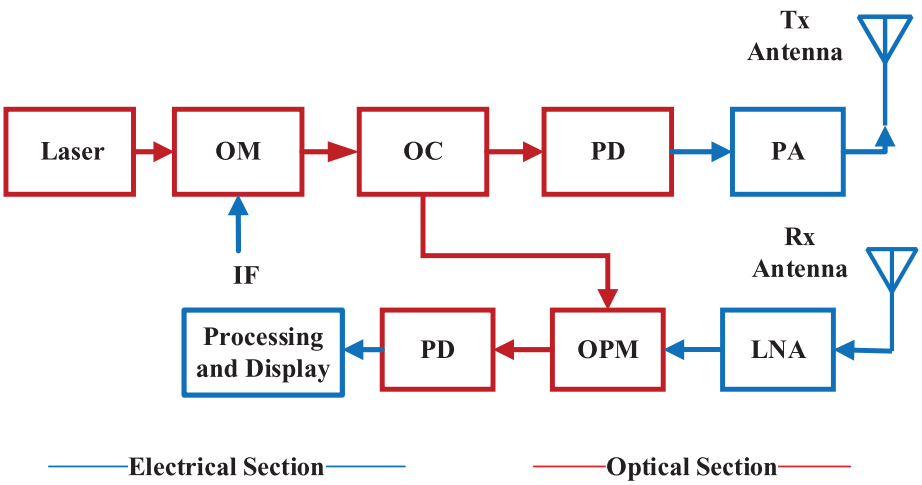

Figure 2
Photonic beamforming architecture utilizing Recirculating Chirped Fiber Bragg Grating (RCFBG) loops for true time delay (TTD)

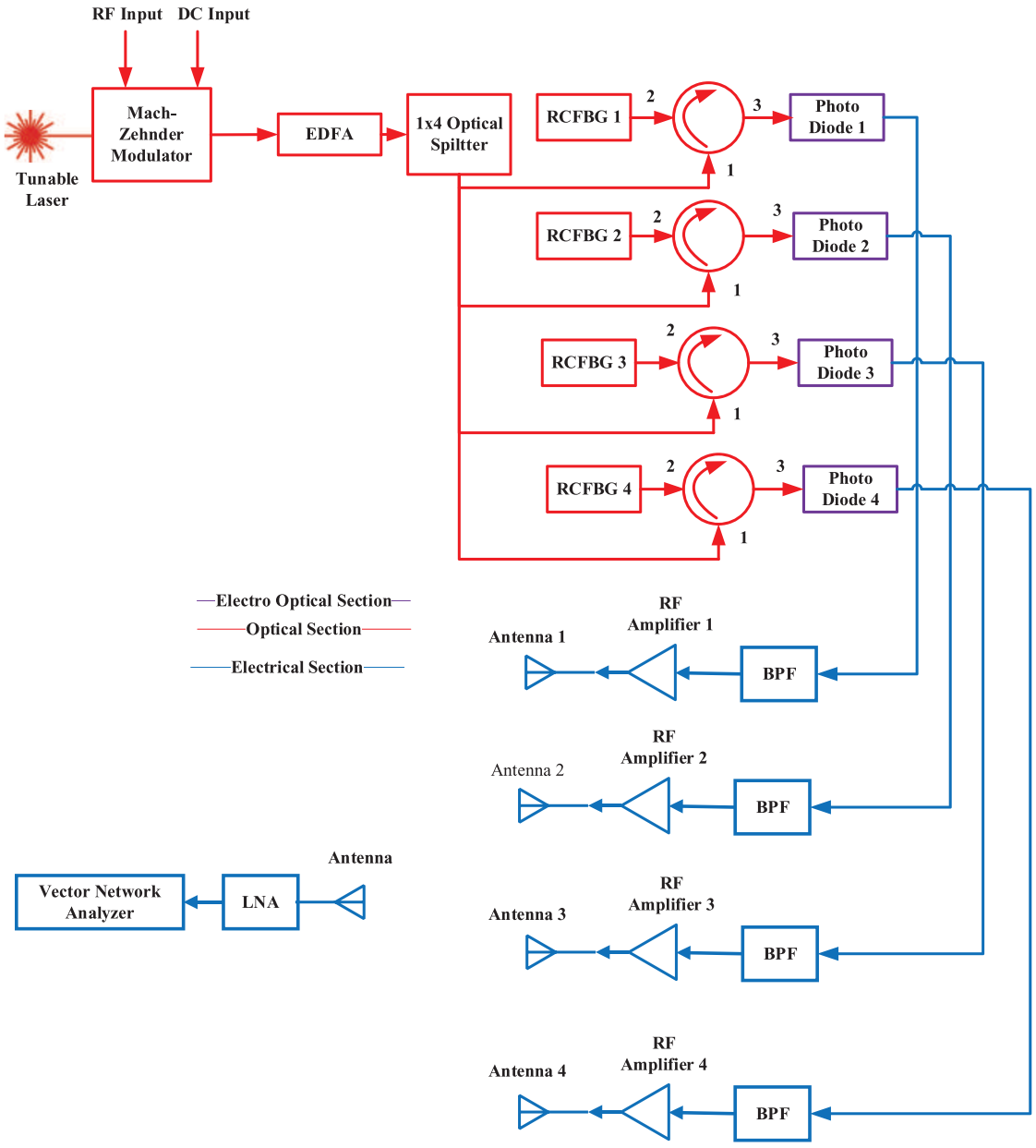

a laser source. This carrier is modulated with the RF signal, typically using an electro-optic modulator, to create an optical signal that carries the RF information. The modulated optical signal is distributed to different elements of a phased-array antenna via optical fibers or integrated photonic circuits. Optical true-time delay (OTTD) lines or phase shifters introduce precise delays or phase shifts to each signal path, which determines the direction of the resulting RF beam when the signals are combined. The precision delays are implemented as a hardware using Recirculating Chirped Fiber Bragg Grating (RCFBG) loop. This loop is a highly tunable, scalable, and hardware-efficient method for generating progressive delays. After phase shifting or delaying, the optical signals are converted back to RF signals using photodetectors. A band pass filter (BPF) is used to separate the different bands. The RF signals are then fed into the antenna elements, where they interfere constructively or destructively to form the desired beam pattern. By dynamically controlling the delays or phase shifts in the optical domain, the direction of the RF beam can be steered in real-time without mechanically moving the antenna, enabling rapid and flexible beam steering.

Phase shift for beamforming is shown as below

$$\Delta\phi_i = \frac{2\pi f d_i \sin\theta}{c} \tag{4}$$

where $4\varphi i$ is the phase shift for the ith antenna element, f is the frequency of the RF signal, d_i is the distance from the reference point to the ith element, θ is the angle of beam steering, c is the speed of light. Advantages are broad bandwidth, low loss, dynamic beam steering, integration with photonic circuits. Applications include phased-array antenna systems, 5G/6G communications, satellite communications, electronic warfare [16, 21–23].

2.3. Photonics for Doppler measurement

Photonics for Doppler measurement refers to the use of photonic (optical) technologies to detect and measure the Doppler shift in the frequency of light reflected or scattered from a moving object. This technique is widely used to determine the velocity of objects by analyzing the change in frequency of the returned signal due to the Doppler effect. A simple arrangement for measuring the velocity of a teardrop particle is shown in the Figure 3 [24]. The laser beam is split and made to incident on the teardrop at the intersection of the two beams by a lens. The light scatters in all directions and a lens at angle captures and incidents it on a photodiode. The output of the photodiode is used to do various measurements in a data acquisition module (DAQ) followed by a computer.

Doppler shift for light is given by

$$\Delta f = \frac{2vf_0}{c} cos \tag{5}$$

where Δf is the Doppler frequency shift, v is the relative velocity of the object, f_0 is the frequency of the incident light, c is the speed of light, θ is the angle between the direction of motion and the incident light. Optical power in homodyne detection can be expressed as

$$P_{detected} = P_{signal} + P_{LO} + 2\sqrt{P_{signal}P_{LO}}\, cos\,(\Delta\phi) \tag{6}$$

where $P_{detected}$ is the detected optical power, P_{signal} is the power of the Doppler-shifted signal, P_{LO} is the power of the local oscillator, ϕ is the phase difference between the signal and the local oscillator.

Advantages of photonic Doppler measurement are photonic systems, especially those using laser sources, offer extremely precise frequency measurements, allowing for accurate velocity determination, photonic Doppler measurement systems can measure the velocity of objects without physical contact, which is particularly useful in delicate or high-speed scenarios, photonic Doppler measurement can be applied in various fields, including fluid dynamics, automotive safety (LiDAR systems), and atmospheric studies, photonic Doppler systems can provide real-time velocity data, which is essential in applications like navigation, autonomous driving, and industrial process control. Applications include Laser Doppler Velocimetry (LDV), LiDAR systems, atmospheric Doppler radar, optical Doppler tomography [25–29].

2.4. Direction of arrival (DOA) estimation by photonic systems

Direction of arrival (DoA) is associated with radar and communication systems, where it refers to the angle from which a signal or wavefront arrives at a sensor or an antenna array. In the context of a photonic electronic warfare (EW) system, DoA helps in the detection and analysis of electromagnetic signals, including radar emissions [30].

A simplified and generic block diagram is shown in Figure 4 to illustrate the key stages involved in a typical DOA estimation process in a photonic EW system.

The first stage of the system is signal reception where the antenna array captures incoming RF/microwave signals. This stage has an electro-optical (E/O) conversion to convert the received electrical signals into the optical domain. In the next stage of photonic signal processing, the now-optical signals undergo optical beamforming, phase shifting, and manipulation.

The next stage comes with information extraction where the optical signals are sent to photodetectors for Optical-to-Electrical (O/E) conversion. The resulting electrical signals (containing the power and phase information) are then sampled, often using compressive sensing techniques. Digital Signal Processing (DSP) algorithms calculate the angles based on the digitized data and goes to the output and display. In 5G/6G communication, and electronic warfare systems higher frequencies and wider bandwidths are used. The electronics struggle to process them and the optical domain processing is easy in this case. In addition, using optical in this system leads to avoidance of beam squint problem in electronic processing and allows parallel Processing and multiplexing which reduces the hardware complexity.

In [31], researchers exploited the analog computing properties of a photonic matrix-vector multiplier circuit for direction-of-arrival problem. In this research, real-time direction-finding sensing was done by a ultra-compact design which required

Figure 3
Microwave photonic (MWP) setup for Doppler frequency measurement of moving particles

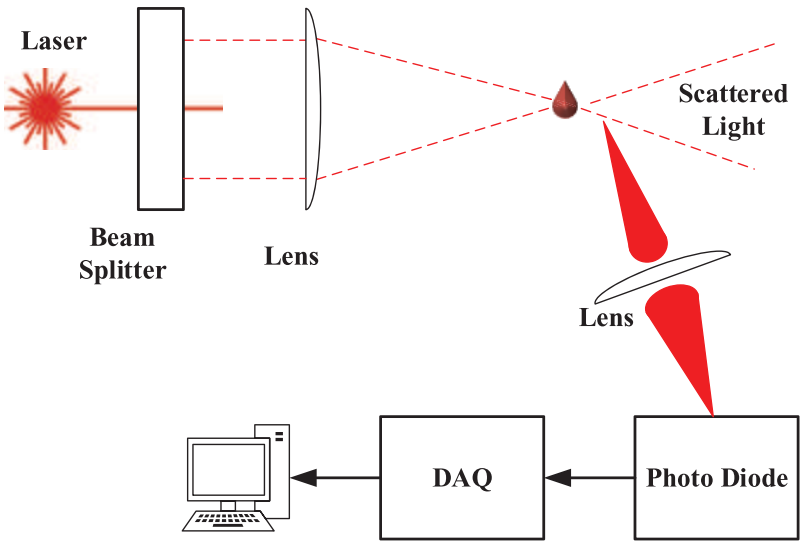

Figure 4
Processing stages for Direction of Arrival (DoA) estimation in photonic electronic warfare systems

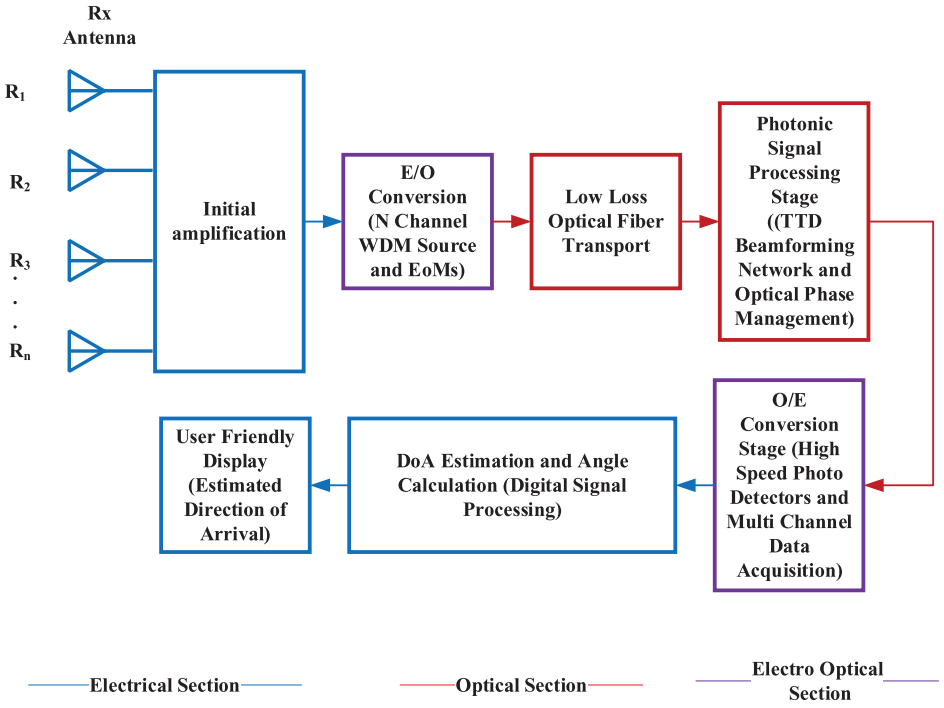

minimal digital signal processing. requirements. It has to be noted that existing systems used for AoA are limited to a maximum range of 0° to 180° due to phase ambiguity. There are several methods, with increased complexity are present to solve this problem. One such method is given in [32] is optical down-conversion and reference phase comparison. In this system, phase ambiguity is resolved achieving a 360° phase measurement range and extending the angle-of-arrival (AOA) measurement range to ± 90°(180° total).

For DOA measurement, phase shift calculation can be done by the following equation. Let us assume, a far-field, narrow-band source emitting a plane wave is incident upon a Uniform Linear Array (ULA). The phase difference $\Delta\phi$ between adjacent sensor elements is geometrically determined by

$$\Delta\phi = \frac{2\pi d}{\lambda_{RF}} sin(\theta) \tag{7}$$

where $\Delta\phi$ is the phase difference, θ is the angle of arrival, d is the spacing between adjacent sensors in an antenna array and λ is the wavelength of the incoming signal. Beamforming is applied to the signals from different sensors to create a combined signal. The combined signal's phase is adjusted to steer the beam in the desired direction. The general form of the combined signal (X) can be expressed as

$$X = \sum_{n=1}^{N} A_n e^{j(\omega_{RF} t - \phi_n)} \tag{8}$$

where A_n is the amplitude of the signal at the nth sensor, ω_{RF} is the angular frequency of the RF signal, t is time, and ϕ_n is the phase adjustment applied to the signal from the nth sensor. The array response of a uniform linear array model is given by

$$a(\theta) = \left[1, e^{-j\frac{2\pi d}{\lambda_{RF}}\sin(\theta)}, \ldots, e^{-j\frac{2\pi(N-1)d}{\lambda_{RF}}\sin(\theta)}\right]^T \tag{9}$$

where $a(\theta)$ is the $N \times 1$ array response, θ is the angle of arrival, d is the inter-element spacing, λ is the wavelength of the incoming signal. The received signal of the array can be modeled as

$$x(t) = a(\theta)s(t) + n(t) \tag{10}$$

where $x(t)$ $N \times 1$ is the received signal vector, $s(t)$ is the source signal, and $n(t)$ is the noise vector.

2.5. Light detection and ranging (LiDAR) for environmental sensing

Photonic sensing devices have become important in fields as diverse as medicine, agriculture, environmental monitoring, and construction. Their high sensitivity and selectivity can accurately detect small changes in the biological environment and monitor pollution [33–35].

Light Detection and Ranging (LiDAR) sensors operate in the optical wavelength range and act as optical counterparts to radar sensors facilitating the detection of aerosols and trace gases with great accuracy. The LiDAR system uses a laser module to emit a measuring signal, with a photodiode and filter detecting the reflected light. As the beam travels, particles (in atmosphere) cause scattering, altering the return signal. The Data Acquisition System (DAQ) processes and interprets the data. A typical LiDAR configuration is shown in Figure 5. In aerosol remote sensing applications, the transmitter is mostly a pulsed laser, the receiver is an optical assembly equipped with a telescope that collects background radiation and then filters the collected optical signal to reduce noise caused by background radiation. The electrical signals are then converted by a photodetector, amplified, digitized, and analyzed [36].

In LiDAR systems, the laser emits pulses of light into the atmosphere. Atmospheric constituents such as aerosols and molecules interact with these pulses in two ways: they attenuate

Figure 5
Transmitter and receiver configuration of a LiDAR system for atmospheric aerosol sensing

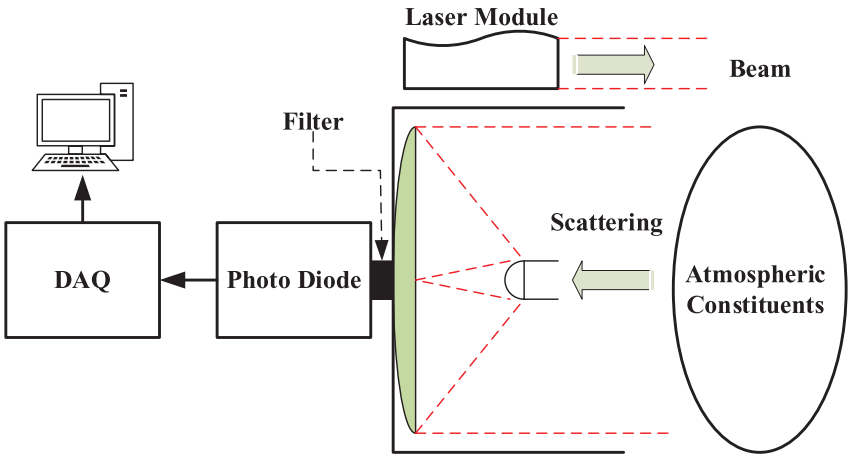

the emitted radiation and scatter some of it back toward the receiver. The LiDAR system captures this scattered radiation, processes it, and uses it to measure atmospheric properties [35]. The transmittance $T_{\lambda 0}(R)$ of an atmospheric path of length R is described by the equation [35]:

$$T_{\lambda_0}(R) = \frac{I_{\lambda_0}(R)}{I_{\lambda_0}(0)} = \exp\left(-\int_0^R \alpha_{\lambda_0}(u)\, du\right) \tag{11}$$

where $I_{\lambda 0}(R)$ is the intensity at range R, and $\alpha_{\lambda 0}$ is the atmospheric optical extinction coefficient along the path. This coefficient encompasses both scattering and absorption contributions from aerosols and molecules, expressed as:

$$\alpha_{\lambda_0} = \alpha_{mol,\lambda_0} + \alpha_{aer,\lambda_0} \tag{12}$$

Similarly, the atmospheric backscatter coefficient $\beta_{\lambda 0}$ quantifies the radiation scattered back towards the receiver, and it also results from both aerosols and molecules:

$$\beta_{\lambda_0} = \beta_{mol,\lambda_0} + \beta_{aer,\lambda_0} \tag{13}$$

- Applications in Agriculture: In Figure 6, a flowchart depicting LiDAR applications in agriculture, including crop monitoring, yield prediction, and terrain analysis for precision farming is given. Remote sensing technologies, such as LiDAR, play an important role in providing a comprehensive view of crop health.

In precision agriculture, accurate crop mapping is essential for effective crop management and yield improvement. These methods are capable of detecting plant stresses and diseases. The efficiency of crop production in precision agriculture relies heavily on accurate plant spectral profiles, which are typically obtained by spectrometers under ambient light conditions. To address this issue, hyperspectral LiDAR (HSL) systems are used for robust collection of spectral profiles over a wide range of wavelengths. By harnessing LiDAR's ability to deliver high-resolution three-dimensional data, farmers can gain detailed insights into crop health and field conditions. Combining LiDAR with optics such as hyperspectral imaging and soil sensors provides a more comprehensive understanding of factors affecting crop growth which leads to improved agricultural productivity [37].

Soil profiling: Integrating optics into soil analysis, particularly through advanced infrared and near-infrared spectroscopy,

Figure 6
Flowchart of LiDAR applications in precision agriculture, including crop health and yield monitoring

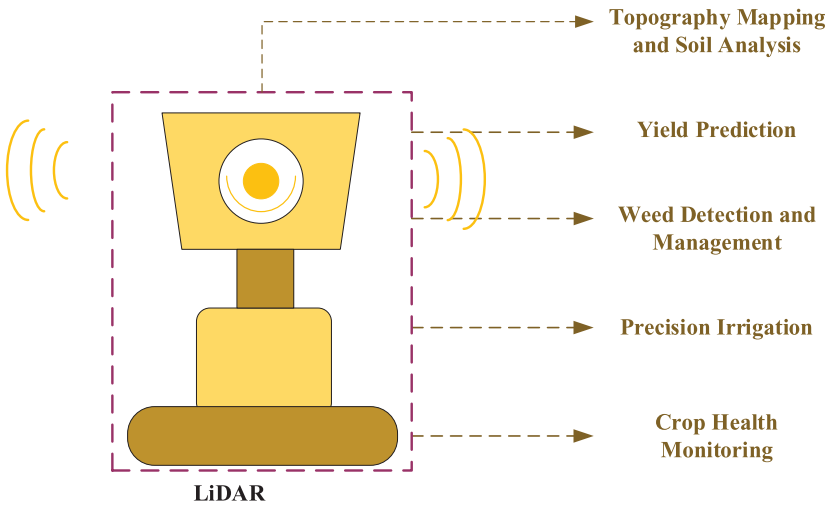

dramatically increases the accuracy of soil quality assessments even under tough conditions. These advances provide a foundational density to improve land management practices and precision agriculture. Optical technologies such as soil spectroscopy complement traditional laboratory methods by collecting comprehensive geophysical data to enable environmental simulation by non-invasive methods so recent advances including microelectromechanical systems (MEMS) facilitate more accurate and timely measurements [38].

Environmental monitoring: LiDAR technology has proven invaluable in the detection and monitoring of earthquakes due to its ability to capture detailed geological information with high accuracy. Applications in seismic surveys include identifying earthquake zones can be mapped, erosion monitoring and topography monitoring, High-resolution digital elevation models (DEMs). The electromagnetic capacity of the technology enables accurate detection of changes in terrain over time, which is critical for early warning systems and hazard assessment. Organizations such as the United States Geological Survey (USGS) use LiDAR to detect earthquakes and analyze maps and changes in the map. This capability also contributes to the detection of new seismic activity and preliminary assessment of affected areas. Research institutes and agencies internationally are using LiDAR to improve seismic hazard assessment and develop effective mitigation techniques. Combining LiDAR data with other landslide data empowers researchers and that enhances understanding of seismicity and contributes to more informed decision-making in risk management [39].

Flood tracking: Advances in LiDAR technology in recent decades have revolutionized the acquisition and tracking of high-resolution geographic data, essential for applications such as flood modeling, forestry, construction, mining, etc. LiDAR's ability to provide precise and accurate information has been revolutionary. Traditional methods often fall short in producing high-resolution digital elevation models (DEMs), leading to less accurate flood simulations. It happens as a result that LiDAR data are widely used as a better alternative [40]. LiDAR technology plays an important role in flood forecasting by providing detailed information on flood elevations. The high-resolution elevation information provided by LiDAR enhances flood modeling by improving the accuracy of landscape mapping. In addition, LiDAR data provide valuable information on surface roughness, further refining flood forecasting. Integration of LiDAR technology with any remotely sensed object can be used to improve the efficiency of this technology, especially in flood modeling and monitoring [40].

Disaster response: LiDAR is used as a water sensor in water level monitoring and development and implementation of flood warning systems. After its construction, the system was used to build the Bucayao Bridge in Oriental Mindoro. A recent study in Calapan city developed a sophisticated water level monitoring and flood warning system. This system used a floating material embedded in a heavy plastic mat to reflect the beam from the LiDAR sensor, enabling precise and accurate water level measurements [41].

3. RF Photonics Network for Space-Based Remote Sensing

An RF photonics network for space-based remote sensing refers to the integration of photonic technologies with RF systems to enhance the performance and capabilities of remote sensing satellites. This network combines optical and RF components to process, transmit, and receive signals more efficiently, enabling high-resolution imaging, precise measurements, and real-time data transmission over vast distances. The use of photonics in RF systems allows for broader bandwidths, lower noise, reduced signal loss, and higher data rates, which are crucial for modern space-based remote sensing missions.

3.1. Photonic SAR

Photonic synthetic aperture radar (SAR) for space-based remote sensing involves using photonic technologies to enhance the capabilities of SAR systems deployed on satellites or space platforms. SAR is a radar technique that generates high-resolution images of the earth's surface by processing the reflected radar signals collected over time as the satellite moves along its orbit. The integration of photonics in SAR systems enables higher bandwidth, lower phase noise, and improved signal processing capabilities, making it ideal for space-based applications where precision and efficiency are crucial. Synthetic aperture radar operates by transmitting microwave signals toward the earth's surface and receiving the reflected signals. As the satellite orbits, it continuously collects data, which is then combined to create a high-resolution image. The "synthetic aperture" refers to the fact that the radar uses the motion of the satellite to simulate a larger antenna, thereby achieving finer resolution. Photonic SAR utilizes the properties of light and optical components to improve various aspects of the radar system. Photonic technologies facilitate the implementation of distributed aperture SAR systems, where multiple satellites work in coordination, further enhancing imaging resolution and coverage.

The range resolution ΔR of a SAR system is determined by the bandwidth B of the transmitted signal and it is given as

$$\Delta R = \frac{c}{2B} \tag{14}$$

where c is the speed of light. The azimuth resolution x is related to the wavelength λ of the radar signal and the length L of the synthetic aperture

$$\Delta x = \frac{\lambda}{2L} \tag{15}$$

Advantages of photonic SAR systems are higher resolution, real-time processing, lower phase noise due to photonic oscillators and scalability. There are also disadvantages such as need for advanced design for integration, thermal management, and higher costs. In remote sensing, photonic SAR systems are used for high-resolution imaging of the earth's surface, enabling detailed analysis of terrain, vegetation, urban areas, and other features. Photonic SAR can monitor natural disasters such as floods, earthquakes, and landslides, providing critical data for emergency response and recovery [42].

3.2. Photonic inverse synthetic aperture radar (ISAR)

ISAR is an advanced radar imaging technique that uses photonic technologies to enhance the resolution and capabilities of ISAR systems. Higher-resolution images by wide bandwidth, low phase noise leading to better detection of small and fast-moving objects, real-time signal processing, higher dynamic range and better selectivity and frequency flexibility are the advantages of using photonics technology.

The cross-range resolution R_{cr} depends on the length of the synthetic aperture, which is related to the observation time and the relative motion as

$$\Delta R_{cr} = \frac{\lambda}{2\theta_{eff} T} \tag{16}$$

where θ_{eff} is the effective rotation angle of the target during the observation period, T is the total observation time. The photonic mixing of RF signals, used to down convert the RF signal to an IF can be described as

$$V_{IF}(t) = V_{RF}(t)\, V_{LO}(t) \tag{17}$$

where, V_{RF} (t) is the RF signal, $V_{LO}(t)$ is the local oscillator signal generated through photonic means. A schematic diagram of a photonics-based ISAR system is shown in Figure 7 [43]. In this system, an electrical radar signal is encoded onto a laser beam using a modulator dual-parallel Mach-Zehnder modulator(DPZM). A portion of this optical signal is converted back into an electrical radio wave by a photodiode and transmitted out to the target (the drone). The radar echo bouncing off the moving target is captured by the receiving antenna and used to modulate a reference laser beam inside the electro-optical phase modulator. Then, the combined optical signal is filtered and converted back into an electrical signal by a second photodiode. Next, it is processed by a computer to generate a high-resolution image of the target. The main thing behind this system is it uses optics to generate, mix, and process the radar signals, which allows for much higher precision and resolution than traditional electronics alone. Photonic ISAR systems can achieve higher resolution images due to the wider bandwidths and lower phase noise provided by photonic technologies.

Application areas of photonic ISAR are target recognition, missile tracking, orbital debris imaging, satellite inspection, aircraft surveillance, remote sensing, planetary exploration, and astrophysics [42]. The comparison between electronic SAR and photonic SAR will provide the key advantages and necessity to shift to photonics-based systems, and it is presented in Table 2.

Figure 7
Photonics-based Inverse Synthetic Aperture Radar (ISAR) system for high-resolution target imaging

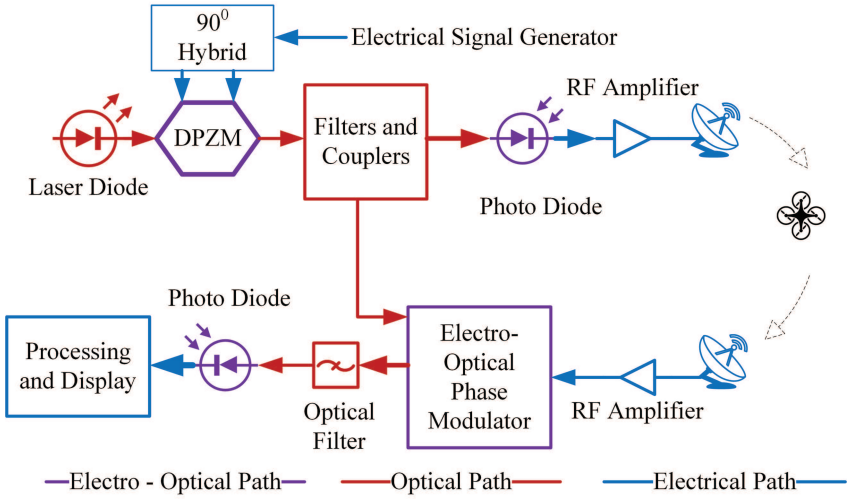

Table 2
Summary of differences between conventional SAR and photonics-based SAR

Performance Metric	Traditional Electronic SAR	Photonic SAR (Microwave Photonics)
Instantaneous Bandwidth	Typically < 2 GHz (limited by ADC/DAC sampling rates and electronic mixers).	> 10 GHz to over 40 GHz (using optical frequency combs or TFLN modulators).
Range Resolution	~ 15 cm to 50 cm (depending on the specific frequency band and bandwidth).	Sub-centimeter to ~ 2 cm (e.g., recent mmWave photonic ISARs achieved 0.73 cm resolution).
Transmission Loss	High: ~ 500 to 1000 dB/km (using copper coaxial cables at high frequencies).	Ultra-low: ~ 0.2 dB/km (using standard silica optical fibers).
Phase Noise / Timing Jitter	Degrades significantly at higher frequencies (mmWave) due to electronic frequency multiplication.	Exceptionally low (e.g., sub-femtosecond jitter using mode-locked lasers or OEOs).
EMI Immunity	Susceptible to Electromagnetic Interference (EMI) and radio frequency jamming.	Absolute immunity; light traveling through fiber is unaffected by external RF fields.
Beamforming Mechanism	Electronic phase shifters (prone to "beam squint" for wideband signals).	Optical True-Time Delay (TTD) networks (frequency-independent).
SWaP (Size, Weight, Power)	High (bulky waveguides, heavy copper cabling, high thermal output).	Drastically reduced (hair-thin optical fibers, compact photonic integrated circuits).

The main advantages we get from photonic SAR are in the higher bandwidth processing capability thereby increasing the resolution. Low phase noise improves the SNR and image contrast. Low EMI leads to capability in hostile, noisy, or contested electromagnetic environments.

4. Artificial Neural Networks (ANN) in Photonics Remote Sensing

There is an increase in the amount of research into the use of ANNs in photonics for remote sensing. The integration of deep learning algorithms with photonics has proven to be very beneficial for ground-level monitoring. This area is gaining significant attention from researchers, with numerous studies being conducted to explore this field.

The integration of ANN into photonics sensing can automate signal processing, feature extraction, anomaly detection, and predictive analytics. This addition will improve sensing accuracy and enable real-time decisions [44].

4.1. Enhancing photonic remote sensing with ANN

Remote sensing is a technique of collecting information about an area, phenomenon, or object from a distance. There is always a need for AI in remote sensing for improving the data handling, interpretation related to remote sensing [45]. For example, optical remote sensing for land is often obscured by presence of cloud [46]. The cloud and its shadow obstructs the process of picturizing the land and they have to be segmented. The research used CNN-based advanced AI algorithm called SpecGateNet on benchmarked data sets. The AI algorithm was able to do segmentation better than available methods. Sometimes, physical optical and sensor hardware on satellites or imaging systems is expensive and prohibitive. In this cases, AI can be used for old photonics-based remote sensing systems to extract cleaner and sharper insights. In Reference [47], an AI-based system called as Multi-scale Windowed Spatial and Channel Attention Network is designed to solve Single-Image Super-Resolution (SISR) for remote sensing. It is essentially a smart image-enhancement network that turns blurry or low-resolution satellite/remote-sensing pictures into clear, high-definition images. It has been tested with benchmarked data sets and proven to be superior.

4.2. Optical imaging

One application shared between optical and RF atmospheric propagation is imaging, where both techniques are used to capture and analyze environmental data through different wavelengths of the electromagnetic spectrum [48]. The introduction of hyperspectral imaging in remote sensing (frequency band of visible to near-infrared) is a viable choice for environment monitoring and disaster management. In hyperspectral images, each pixel is a high-dimensional vector that shows reflectance at different wavelengths. This ability to capture fine spectral details makes hyperspectral images useful in many applications. In hyperspectral imaging, which captures data across different wavelengths, the spectral signature of a particular material might look very different depending on its location. For instance, Vegetation: The spectral signature of a forest can vary significantly from one part of the forest to another due to differences in leaf area index, health of plant, and species. It often occurs due to change in environmental conditions. Also, complex data sets (high dimensional) are needed for hyperspectral images which results in simplification problems [49, 50]. Artificial neural networks have diverse applications, including function approximation, classification, data processing, and robotics controlled with deep learning. The implementation of ANNs in hardware chips such as Field Programmable Gate Array (FPGA) is important to enhance efficiency in real-time applications like face recognition [48]. The main aspect of ANN architectures with a particular interest in optimizing neuron functions are described below:

- Image capturing and preprocessing: Images are captured and prepared for further analysis. The size of the image should be small in order to use memory efficiently which later gets converted to indexed images. The output data of training phase of ANN is in binary form. Pre-processed data includes methods to mitigate noise, image blurring, etc. It is followed by texture differentiation, color identification, and data grouping [48].
- Development of ANN architecture: It involves designing a pipelined network using the backpropagation model to increase the functionality of I/O mapping. The Neural Network is trained using Gradient Descent. It is continued until desired Mean Squared Error is achieved. After training, weights and biases are extracted and optimized parameters are loaded onto an FPGA [48, 51].

The error function E is defined as

$$E = \sum_{i=1}^{n_x} \sum_{j=1}^{n_y} \left(\hat{z}\left(x_i, y_j\right) - z_{ij}\right)^2 \tag{18}$$

where n_x and n_y are the dimensions, z_{ij} is the pixel intensity, and $\hat{z}\ (x_i,\ y_j)$ is the network's output for pixel position $(i,\ j)$. Once trained, the ANN can recognize images by comparing errors between the trained network and actual images. Images with errors below a certain threshold are deemed similar [48, 51].

The error for output neuron k is

$$e\,(n) \quad = x_k\,(n) - y_k\,(n) \tag{19}$$

total error in network is

$$E(n) = \sum_k \left(e_k\,(n)\right)^2 \tag{20}$$

The mean squared error is the average over all training examples and given by

$$E_{AV} = \frac{1}{N} \sum_{n=1}^{N} E(n) \tag{21}$$

The tested images are captured and processed simultaneously. The implementation of ANN allows for mapping of the network logic onto the FPGA, utilizing multiple layers to accommodate larger networks, though at a slower overall speed [48].

Spiking neuron: The combination of ANN with concept of spiking neurons plays an important role in building effective image recognition system [48]. Creation of ANN model based on spiking neurons is to improve computational efficiency. It is followed by image recognition based on output predictions and analyzing for future purpose [48]. ANNs are utilized to improve the recovery of hyperspectral imaging (HIS) captured using compressive sensing techniques. By training neural networks to reconstruct images from random samples, the recovery process becomes more reliable and accurate. The images are obtained through traditional hyperspectral cameras. The effectiveness of ANNs in remote sensing is evaluated based on classification performance. For instance, HSIs

recovered using ANNs with a 10% sampling rate can achieve classification results comparable to those obtained from full-spectrum data [52].

4.3. Noise reduction (denoising)

Recently, HSI for photonic remote sensing is used in agriculture where ANNs not only optimized analysis of data. Modular networks manage huge hyperspectral datasets efficiently, whereas feedforward neural networks (FNN) are used for pattern recognition and spectral classification. CNNs excel at extracting spatial and spectral features from HSI data, and recurrent neural networks (RNN) process time-series hyperspectral data for environmental monitoring [53]. In HSI, denoising is an important operation that directly affects the quality and utility of data in remote sensing. Recent advances in deep learning have brought powerful approaches to tackle this challenge, particularly through generative adversarial networks (GANs). Figure 8 shows the architecture of the GAN framework for HIS [53].

According to Chen et al. [54], GANs have shown a positive response to improve the quality of hyperspectral images by effectively removing noise while retaining important information. Chen et al. [54] used GAN to reduce the speckle noise and preserve the texture details in the optical coherence tomography images, highlighting the importance of GANs in this field. It is noted that GANs, by learning to produce high-quality images from noisy inputs, can significantly improve the quality of hyperspectral data. This approach not only improves the visualization of the images, but also helps to obtain accurate analysis and interpretation of the data. The applications of GANs seek to improve noise reduction, ultimately increasing the performance of remote sensing applications. The generator component starts with a Noise Input Vector, which is being used as the initiating point for creating artificial HSI. It is followed by a series of *Upsampling Layers*, which converts the external noise into a detailed HSI. Arrows in Figure 8 illustrate the flow from the *Noise Input Vector*, through the *Upsampling Layers*, to the final generated HSI. The discriminator component begins with an HSI Input, which is the HSI under analysis. This image is analyzed by the *Feature Extraction Layers*, which study its characteristics to assess whether it is real or artificial. The output is the probability of the image. Arrows indicate the flow from the HSI Input, through the *Feature Extraction Layers*, to the *Authenticity Score*.

Several challenges need to be addressed in developing neural network (NN) algorithms for specific applications in optics for remote sensing. Initially, the focus is usually on improving performance such as comparing the final shape and digital surface propagation techniques with a specified number of iterations but equally important considering the practical aspects of the NN implementation, especially the complexity involved [55].

5. Photonics in Microwave Measurements

In modern electronics and communication systems, there arise situation where the, instantaneous frequency, time frequency analysis, Angle of arrival (AoA), phase noise, and other functionalities of the system is to be measured. With photonics capable of operating with wide bandwidth and frequency range and often implemented with simplicity, it can be used in the above measurements. In this section, such applications are investigated in detail.

5.1. Need for microwave measurements

Microwave measurements in photonic circuits constitute a range of techniques and analyses aimed at understanding and optimizing the interaction between microwave and optical signals within integrated circuits. This field is essential for the development and optimization of devices and systems that utilize the interaction between photonics and microwaves. Microwave measurements involve analyzing signals in the frequency domain. In photonic circuits, this includes understanding the behavior of optical signals and their interaction with microwave frequencies. Photonic-electronic interface is crucial for converting signals between the optical and microwave domains. Photonic circuits often involve the modulation of optical signals using microwave frequencies. Microwave measurements are used to analyze the efficiency and fidelity of this modulation process. Microwave measurements assess the integrity of signals as they traverse through photonic components. This includes examining factors such as signal loss, dispersion, and distortion.

Figure 8
Architecture of the Generative Adversarial Network (GAN) framework for hyperspectral image denoising

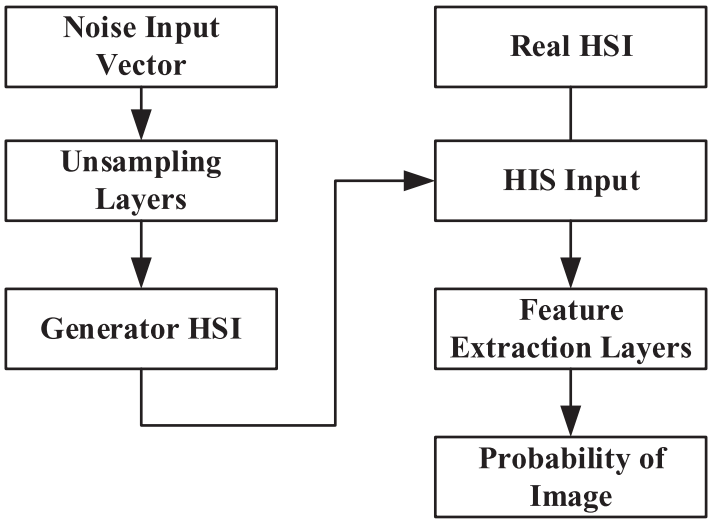

5.1.1. Key equations and concepts

Some common equations used for microwave measurements are

$$v = \frac{1}{\sqrt{\varepsilon_r \mu_r}} \tag{22}$$

where v is the propagation velocity, ε_r is the relative permittivity and μ_r is the relative permeability of the material.

$$\lambda = \frac{v}{f} \tag{23}$$

where λ is the wavelength and f is the frequency of the wave.

$$f_c = \frac{c}{2a} \tag{24}$$

where, f_c is the waveguide cutoff frequency, c is the speed of the light and a is the dimension of the waveguide.

$$\tau = \frac{Z_L - Z_0}{Z_L + Z_0} \tag{25}$$

where τ is the reflection coefficient, Z_L is the load impedance and Z_0 is the characteristic impedance of the transmission line.

$$VSWR = \frac{1 + |\tau|}{1 - |\tau|} \tag{26}$$

where $VSWR$ is the voltage standing wave ratio.

$$P_r = P_t G_t G_r \left(\frac{\lambda}{4\pi R}\right)^2 \tag{27}$$

where P_r is the received power, P_t is the transmitted power, G_t, G_r are the gains of the transmitting and receiving antennas, λ is the wavelength and R is the distance between the antennas. This equation is known as the Friis Transmission Equation.

$$NF = 10log\left(\frac{SNR_{in}}{SNR_{out}}\right) \tag{28}$$

where $_{NF}$ is the Noise Figure, SNR_{in} is the input signal-to-noise ratio and SNR_{out} is the output signal-to-noise ratio.

5.2. Microwave frequency measurement system

Accurate frequency measurement of microwave signals holds significant importance in contemporary EW applications and wireless communication systems [56]. While conventional electronic methods for microwave measurements have been reliably established, they prove unsuitable for high-frequency signals due to the limitations of electronic devices [57]. The conventional electronic systems have limitations, and photonics-based measurement system has flexibility, minimal frequency-dependent loss, electromagnetic interference, compact size, and high-speed performance [58].

A generic architecture of a photonics-based microwave measurement system is shown in Figure 9 [58].

An input electrical microwave signal modulates an optical light source (e.g., CW laser) using an EO (Electro-Optic) modulator. The modulated signal is manipulated within the optical domain by the photonic processing module (e.g., using phase modulation (PM), intensity modulation, polarization modulation (PoIM), electro-absorption modulator(EAM)). The optical signal is converted back to an electrical signal via OE (Optic-Electro) conversion (using photodetectors like PD or avalanche photodiode (APD)), after which a post-processing module extracts the final target parameters. Furthermore, modern photonics-based instantaneous frequency measurement (IFM) systems leverage advanced optical filtering to achieve ultra-wide measurement bandwidths from 1 GHz up to 40 GHz. These systems maintain high precision across this range, demonstrating frequency measurement errors as low as ± 7 MHz to ± 100 MHz, drastically outperforming the operational limits of traditional electronic frequency counters. This vastly outperforms the operational bandwidth limits of traditional electronic frequency counters [59].

5.3. Microwave spectrum analysis based on frequency scanning

Examining the spectrum through frequency or wavelength scanning is a potent method for signal measurement, applicable

Figure 9
Architectural framework of a photonics-based microwave measurement system

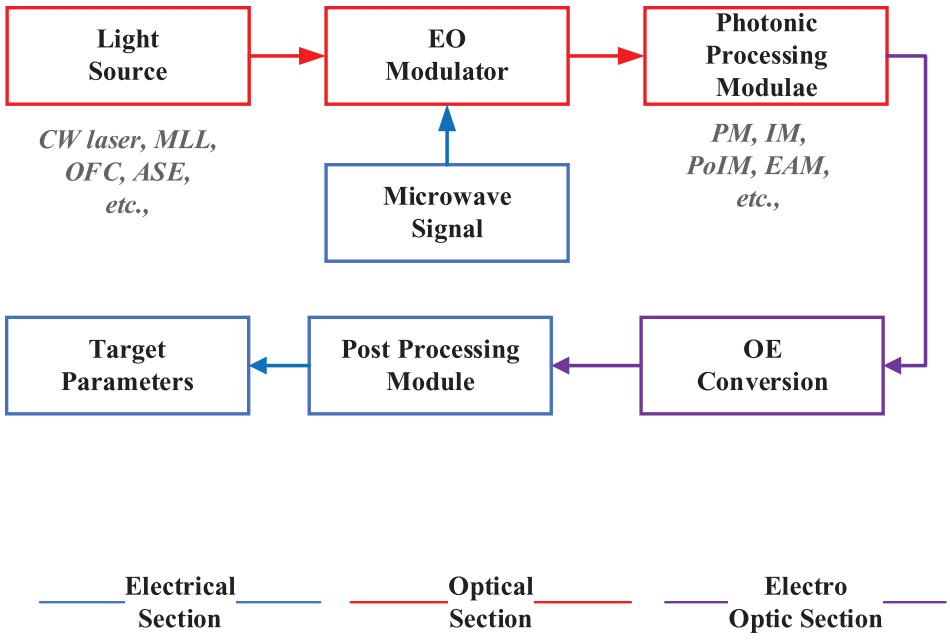

in both the electrical and optical domains. In the optical realm, the measurement process commonly involves scanning the wavelength of a light source or the transmission/reflection spectral response of an optical filter. Subsequent to photodetection, the microwave spectrum across a broad frequency spectrum is systematically recorded point by point. In more detail, an Optical Spectrum Analyzer (OSA) equipped with a scanning grating is a pivotal instrument for this purpose. The OSA facilitates spectrum analysis of a microwave signal by offering an extensive frequency measurement range. For instance, it can cover the entire C band or even extend into the C + L band, all within the optical domain. The optical domain's spectrum analysis involves precise scanning and detection processes, coupled with the capabilities of an OSA, enabling comprehensive and accurate measurements of microwave signals across a wide frequency spectrum.

In Figure 10, the system begins with a light source, which can be a single-wavelength continuous-wave (CW) laser, a mode-locked pulsed laser (MLL), or an optical frequency comb (OFC). This light source generates the optical carrier for subsequent modulation. The optical carrier is modulated by an electro-optic modulator (EOM). The EOM can perform various modulation types, including intensity, phase, polarization, or electro-absorption modulation. It is a crucial unit for impressing the microwave signal onto the optical carrier. The heart of the system involves a pair of Complementary Comb Filters. These filters operate in tandem to manipulate the optical signal in the frequency domain. Each filter has a specific role, and their complementary nature enhances the selectivity and precision of the frequency processing. After passing through the comb filters, the modulated optical signal is then subjected to photodetection. This process involves converting the optical signal back into an electrical signal, allowing for further analysis in the electrical domain. The system specializes in intermediate frequency measurement (IFM). This means that it is designed to measure and analyze signals within a specific frequency range, typically between radio frequencies and microwaves. The recorded electrical signal, representing the microwave spectrum, undergoes data analysis. This step involves processing the signal to extract relevant information about the frequency components and characteristics of the original microwave signal. The final stage involves a post-processing module, where the detailed analysis is carried out. This module refines the data, extracts specific parameters of interest, and provides a comprehensive understanding of the microwave signal. Two frequency-dependent optical powers are detected and the power ratio (R) between them is given by [58]:

$$R = \frac{1 - r\cos(2\pi f_m/F)}{1 + r\cos(2\pi f_m/F)} \tag{29}$$

where F denotes free spectral range (FSR) of the comb filter, f_m is the instantaneous frequency, r is the relative peak-to-notch contrast ratio of the two complementary transmission responses. Other parameters, including the signal amplitude, time duration, and time of arrive (TOA), could also be measured in addition to the instantaneous frequency [60].

Recent advancements have demonstrated power-independent frequency-to-power mapping systems capable of operating across expansive multi-gigahertz bandwidths. These modern integrated designs can sustain continuous measurement ranges extending up to 40 GHz, with frequency estimation errors successfully suppressed to the sub-megahertz level, drastically outperforming the operational limits and resolution of conventional electronic spectrum analyzers [61].

5.4. Electric field measurement

Electric field measurement using photonic technology involves detecting and quantifying electric fields through the use of optical (photonic) systems rather than traditional electronic sensors. Photonic electric field sensors use electro-optic or magneto-optic effects, to convert the electric field information into an optical signal, which can then be measured with high sensitivity and accuracy. This approach is particularly advantageous in environments where traditional electronic sensors are prone to electromagnetic interference (EMI) or in applications requiring high-speed measurements over a wide bandwidth. The principle behind photonic electric field measurement involves converting

Figure 10
Photonic Instantaneous Frequency Measurement (IFM) system utilizing a complementary comb filter pair

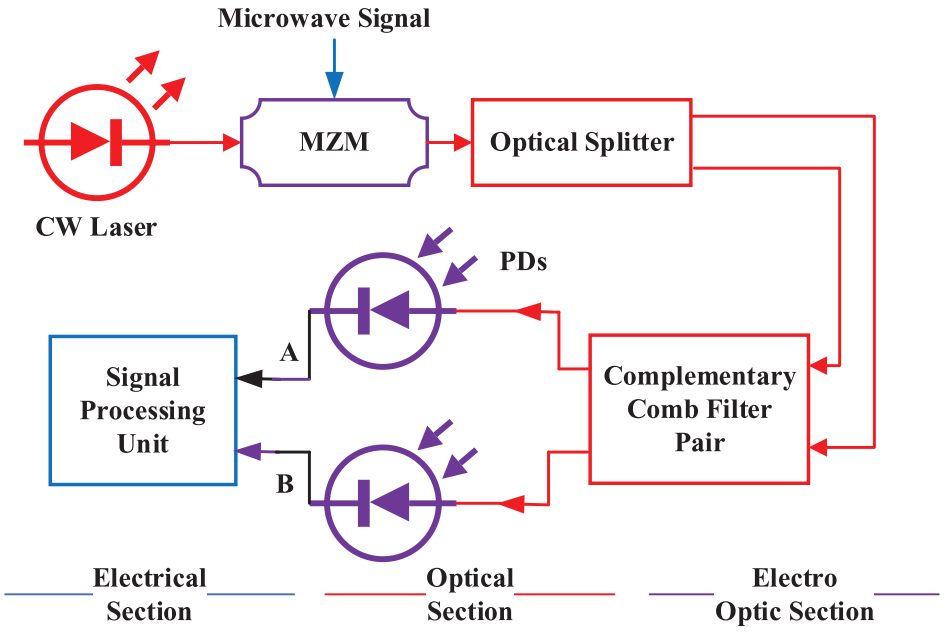

an electric field into a corresponding change in the properties of light, such as its phase, polarization, or intensity. Several techniques are used in photonic electric field sensors. The electro-optic (Pockels) effect occurs when an electric field induces a change in the refractive index of an electro-optic material (e.g., lithium niobate and gallium arsenide). This change in refractive index alters the phase or polarization of light passing through the material, which can be detected to determine the magnitude of the electric field. In an electro-optic modulator (EOM), an electric field is applied to a crystal with electro-optic properties, causing a phase shift in the light passing through the crystal. The magnitude of the phase shift is directly related to the strength of the electric field, allowing for its measurement. A Mach-Zehnder interferometer splits a light beam into two paths. One path passes through an electro-optic material exposed to the electric field, while the other path remains unaffected. The recombination of the two beams produces an interference pattern that shifts according to the electric field, enabling precise field measurement. Optical fibers can be used to measure electric fields by embedding or coating them with electro-optic materials. The electric field induces changes in the optical properties of the fiber, which are then detected as variations in the transmitted light. Phase Shift Due to Electric Field:

$$\Delta\phi = \frac{2\pi n^3 r_{ij} dE}{\lambda} \tag{30}$$

where Δ_φ is the phase shift induced by the electric field, $n$is the refractive index of the electro-optic material, r_{ij} is electro-optic coefficient (Pockels coefficient) of the material, d is the thickness of the electrooptic material, E is the electric field strength, $\lambda$is the wavelength of the light used. Electric Field Sensitivity:

$$S_E = \frac{\Delta\phi}{E} = \frac{2\pi n^3 r_{ij} d}{\lambda} \tag{31}$$

where S_E is the sensitivity of the electric field measurement. Quantitatively, these electro-optic sensors offer an ultra-wide flat frequency response from DC to over 100 GHz. They provide an exceptional measurement dynamic range, capable of linearly detecting field strengths from highly sensitive thresholds (< 1 V/m) up to extreme high-voltage environments (> 100 kV/m) without suffering from electronic saturation [62]. Advantages of electric field measurement using photonic technology are [63], (a) Immunity towards EMI – Photonic sensors are inherently immune to EMI, making them ideal for use in environments with strong electromagnetic fields or noise. (b) High Sensitivity and Precision – Photonic electric field sensors can detect very small changes in the electric field with high precision due to the sensitivity of optical phase and polarization to electric fields. (c) Wide Bandwidth – Photonic systems can measure electric fields over a broad frequency range, from DC to GHz, making them suitable for various applications. (d) Non-Invasive Measurement – These sensors can measure electric fields without direct electrical contact with the field source, which is beneficial in high-voltage or sensitive environments. (e) Other Applications – High-voltage measurement, electromagnetic compatibility (EMC) testing, aerospace and defense, and biomedical applications [64–66].

5.5. Power measurement using photonic technology

Power measurement using photonic technology involves quantifying the optical power carried by light in photonic systems. This measurement is essential in various applications, including optical communication, laser systems, and photonic integrated circuits (PICs). Photonic power measurement typically uses photodetectors, optical power meters, or other photonic sensors that convert optical power into an electrical signal, which can then be measured with high accuracy. This method is particularly useful in environments where traditional electrical power measurement techniques may be impractical or where high precision is required for optical signals. The principle of power measurement using photonic technology is based on detecting the intensity of light, which is directly proportional to the optical power. This is achieved through various mechanisms such as

Photodetectors: Photodetectors (e.g., photodiodes, phototransistors) convert incoming optical power into an electrical current or voltage. The amount of current generated is proportional to the incident optical power, allowing for precise measurement. The relationship between the incident optical power P_{opt} and the generated photocurrent I_{ph} is given by:

$$I_{ph} = \frac{\eta P_{opt}}{hv} \tag{32}$$

where η is the quantum efficiency of the photodetector, h is Planck's constant, and v is the frequency of the light. Optical power meters: Optical power meters use photodetectors coupled with amplifiers and digital readouts to measure optical power directly. These meters are calibrated to provide accurate readings of the power in units such as milliwatts (mW) or decibels-milliwatt (dBm).

Thermopile sensors: Thermopile sensors measure optical power by converting the absorbed light into heat, which then generates a voltage proportional to the temperature change. This method is particularly useful for measuring high optical powers.

Calorimetric methods: In some cases, the optical power is measured by observing the temperature rise in a material that absorbs the light. The power is calculated based on the amount of energy absorbed over time. Fiber Optic Power Measurement: Optical power in fiber optic systems can be measured using inline power meters or by tapping a small portion of the light for measurement without interrupting the main signal.

Optical Power in dBm is given by

$$PdBm = 10log_{10}\left(\frac{P_{opt}}{1mW}\right) \tag{33}$$

where P_{dBm} is the optical power in decibels referenced to 1 milliwatt, P_{opt} is the optical power in milliwatts. Advantages of power measurement are high accuracy, essential for precision applications in communication and sensing, optical power meters can measure power without affecting the signal, making them ideal for live systems, photonic sensors can measure a wide range of powers, from very low (picoWatts) to very high (Watts) levels. Challenges faced are accurate measurement requires careful calibration of photonic sensors, which can be complex and time-consuming, the response of photodetectors can vary with the wavelength of the light, requiring wavelength-specific calibration, some photonic power measurement techniques, like those using thermopiles, can be sensitive to ambient temperature changes, affecting accuracy. Applications includes power monitoring, attenuation measurement, output power measurement, beam profiling, and precision measurement [36, 67, 68].

6. Photonic Integrated Circuits for Remote Sensing and Microwave Measurement

The advantages of photonics are discussed in detail in the before sections; however, these devices and circuits have to be in an integrated form for mass production, reduction in cost, size, and power consumption. The recent advancements in incorporating various subsystems of remote sensing and microwave measurements as photonics system in a chip are to be discussed. The trends are programmable multifunctional silicon processors, rise of thin-film lithium niobate platforms, ultra-low phase noise silicon nitride oscillators, and spectrum-agile intelligent transceivers for complex environments [69]. In [70], low-loss active and passive waveguides are designed. It is also shown that edge couplers, delay lines, filters, and TTD can be easily incorporated into chip. The research demonstrates the availability of photonic components inside a chip for remote sensing and measurement applications. This research also points the important features of the latest 300 mm foundries which allow the engineers to integrate the advanced photonic components with high-speed RF electronics. The 300 mm wafers will also use extreme UV lithography, sub-90 nm nodes and produce products for 6G, radar, and AI data centers. In [71] research on integrated photonics highlighting the programmable capability is demonstrated. The research shows that bulky radio-frequency filters can be shrunken onto a single, programmable silicon chip, allowing engineers to instantly tune and manage multiple high-speed communication bands (like 5G and radar) simultaneously.

In the area of microwave measurements, Zheng et al. demonstrated a fully integrated microwave photonics multi-parameter measurement system capable of simultaneously extracting signal frequency, phase, and amplitude on a single chip. This PIC is reducing system footprint and can be used in robust sensing and electronic warfare systems on space-borne or uncrewed platforms. This research also successfully overcomes the traditional bandwidth bottleneck of conventional PICs by breaking the 30 GHz limitation and the chip enables ultra-wideband signal analysis [72]. In DoA measurement, photonic integration is now helping in the removal of bulky optical delay lines for spatial tracking by a miniaturized silicon platform. The same research demonstrated a novel AoA measurement system built entirely on a microwave photonic multifunctional chip [73].

7. Discussion and Conclusion

Necessity for higher bandwidth, reduced size and weight, and immunity to electromagnetic interference (EMI) are the fundamental forces driving photonics-based systems. It has been demonstrated throughout this review that microwave photonics has moved beyond theoretical research into practical, high-performance implementations across remote sensing and microwave metrology. *Remote Sensing Advancements:* Photonic radar and LiDAR systems provide unprecedented spectral resolution and sensitivity. Photonic beamforming, through the use of optical true-time delay (OTTD) units, allows for flexible, real-time beam steering without the mechanical constraints or bandwidth limitations of electronic phase shifters. *Space-Based Applications:* The development of Photonic SAR and ISAR systems marks a significant leap in orbital imaging. These systems utilize optical frequency combs and low-phase-noise lasers to produce high-resolution imagery of moving targets and geological features, even in challenging space environments. *AI in photonics-based systems:* The integration of deep learning with photonics has addressed longstanding issues in data processing. Specifically, GAN architectures and iterative shrinkage-Thresholding Algorithm network (ISTA-Net)-based denoising frameworks have proven effective in recovering high-quality hyperspectral images from noisy or compressed samples, which is critical for real-time environmental monitoring. *Measurement Precision*: Photonic techniques for microwave measurements – such as using the Pockels effect for electric field sensing or complementary comb filters for frequency measurement—offer a level of precision and EMI robustness that traditional electronic sensors cannot match. Despite these successes, several hurdles remain for the widespread adoption of RF-photonic networks. The complexity of integration remains high, requiring precise alignment of optical components and advanced thermal management, particularly for space-borne platforms. Furthermore, the high cost of specialized photonic materials and the potential for signal loss in optical-to-electrical conversion interfaces continue to pose challenges for commercial scalability. Looking forward, the development of Integrated Microwave Photonics (IMWP) on chip-scale platforms like Silicon Photonics or Lithium Niobate will be crucial for reducing cost and footprint. Additionally, the speed and efficiency of deep learning algorithms in remote sensing will continue for needed applications. In conclusion, while traditional electronics will remain relevant for lower-frequency applications, the future of high-frequency, wideband remote sensing and precision measurement undeniably lies in the continued evolution of RF-photonic technologies.

Ethical Statement

This study does not contain any studies with human or animal subjects performed by any of the authors.

Conflicts of Interest

The authors declare that they have no conflicts of interest to this work.

Data Availability Statement

Data sharing is not applicable to this article as no new data were created or analyzed in this study.

Author Contribution Statement

R. P. Suhas: Writing – original draft. **A. Arockia Bazil Raj:** Conceptualization, Validation, Resources, Writing – review & editing, Supervision, Project administration. **Nithya R. Gowda:** Investigation, Resources, Writing – review & editing. **T. Shanmugasundaram:** Investigation, Resources, Writing – review & editing. **Anwesha Satapathy:** Investigation, Resources, Writing – review & editing. **Kunal Tupe:** Investigation, Resources, Writing – review & editing. **S. P. K. Babu:** Validation, Resources, Data curation, Writing – review & editing, Visualization, Supervision, Project administration.

References

[1] Yao, J. (2021). Microwave photonic sensors. *Journal of Lightwave Technology*, *39*(12), 3626–3637. https://doi.org/10.1109/JLT.2020.3047442

[2] Kumar, C., Nadeem, M. D., Raghuwanshi, S. K., & Kumar, S. (2024). Recent advancement in microwave photonics

sensing technologies: A review. *IEEE Sensors Journal*, *24*(8), 11974–11985. https://doi.org/10.1109/JSEN.2024.3367963

[3] Crouch, J. N. (1978). An equivalent circuit model for microwave-biased extrinsic photoconductors. *Infrared Physics*, *18*(2), 89–98. https://doi.org/10.1016/0020-0891(78)90016-7

[4] Song, D., Yin, K., Kong, S., Chen, X., & Xu, Z. (2022). Theoretical and experimental investigations of tunable microwave signal generation based on a 1-GHz all-polarization-maintaining mode-locked fiber laser. *Photonics*, *9*(10), 717. https://doi.org/10.3390/photonics9100717

[5] Jin, Y., Yang, Y., Hong, H., Xiang, X., Quan, R., Liu, T., . . . , & Dong, R. (2022). A proof-of-principle demonstration of quantum microwave photonics. *Photonics Research*, *10*(7), 1669–1678. https://doi.org/10.1364/PRJ.453934

[6] Marpaung, D., & Liu, Y. (2022). Chapter nine - Stimulated Brillouin scattering for microwave photonics. In B. J. Eggleton, M. J. Steel, & C. G. Poulton(Eds.), *Brillouin scattering part 2* (*110*, pp. 81–105). Elsevier. https://doi.org/10.1016/bs.semsem.2022.05.003

[7] Lin, Y., Qiu, Q., Fan, Z., & Su, J. (2022). Microwave photonics beamforming for 5G. In *International Conference on Optical Instruments and Technology: Optical Communication and Optical Signal Processing, 12319*, 123190L. https://doi.org/10.1117/12.2620415

[8] Zalevsky, Z. (2023). Remote photonic medicine. In *Optical methods for inspection, characterization, and imaging of biomaterials VI*, *12623*, 126230C. https://doi.org/10.1117/12.2681401

[9] Jafari, O., Shi, W., & LaRochelle, S. (2019). Silicon photonic modulator using coupled Bragg grating resonators in a Mach Zehnder structure. In *Conference on Lasers and Electro-Optics*, 1–2. https://doi.org/10.1364/CLEO_SI.2019.STh3H.2

[10] Mellon, S., Younts, R. A., McBeth, M., Johnson, E. G., Miller, J. K., & Baghdady, M. (2023). Using rapidly tunable photon orbital angular momentum to identify optical channels for remote sensing applications. In *Laser radar technology and applications XXVIII*, *12527*, 1252705. https://doi.org/10.1117/12.2663459

[11] Liu, Z., Du, W., Zhao, L., Luo, L., Qiu, L., Zhang, L., . . . , & Liu, Y. (2022). Broadband and remote electromagnetic spectrum sensing based on photonic electric field sensor chip. *Photonics*, *9*(12), 918. https://doi.org/10.3390/photonics9120918

[12] Sang, F., Fridlander, J., Rosborough, V., Suran Brunelli, S. T., Coldren, L., Klamkin, J., . . . , & Stephen, M. (2021). Integrated photonics technology for Earth science remote-sensing lidar. In *IEEE International Geoscience and Remote Sensing Symposium,* 7708–7711. https://doi.org/10.1109/IGARSS47720.2021.9553656

[13] Selvi, A., Babu, S., & Raj A, A. B. (2025). Recent advances in photonics radar: A review. *International Journal of Electronics and Communication Engineering*, *12*(5), 249–270. https://doi.org/10.14445/23488549/ijece-v12i5p122

[14] Selvi, A., Babu, S., & Raj A, A. B. (2025). A mode-switchable photonic radar system for aerial LSS targets detection and classification. *IEEE Transactions on Aerospace and Electronic Systems*, *61*(2), 3470–3482. https://doi.org/10.1109/TAES.2024.3486257

[15] Nelkovski, K. (2022). *Researchers leverage photonics in radar system to detect down to the millimeter*. Retrieved from: https://www.allaboutcircuits.com

[16] Yao, J., Capmany, J., & Li, M. (2024). Introduction to microwave photonics. In J. Yao, J. Capmany, & M. Li (Eds.), *Microwave photonics* (pp. 1–6). Wiley. https://doi.org/10.1002/9781394205318.ch1

[17] He, H., Li, P., Fan, H., Pu, Z., Zou, X., Pan, W., & Yan, L. (2026). Fiber-based photonic integrated sensing and communication: Enabling technologies and key challenges. *Journal of Optical Communications and Networking*, *18*(4), B33–B48. https://doi.org/10.1364/JOCN.584969

[18] Pan, S., & Zhang, Y. (2022). Microwave photonics: Opportunities and challenges (tutorial). In *2022 IEEE Photonics Conference*, 1–2. https://doi.org/10.1109/IPC53466.2022.9975490

[19] Yang, H., Li, L., & Lin, C. (2021). Application and development of microwave photonics technology in space TT & C system. In *19th International Conference on Optical Communications and Networks*, 1–4. https://doi.org/10.1109/ICOCN53177.2021.9563739

[20] Srivastava, N. K., Parihar, R., & Raghuwanshi, S. K. (2020). Efficient photonic beamforming system incorporating a unique featured tunable chirped fiber Bragg grating for application extended to the Ku-band. *IEEE Transactions on Microwave Theory and Techniques*, *68*(5), 1851–1857. https://doi.org/10.1109/TMTT.2019.2961889

[21] Wang, L., Wang, X., & Pan, S. (2025). Microwave photonics empowered integrated sensing and communication for 6G. *IEEE Transactions on Microwave Theory and Techniques*, *73*(8), 5295–5315. https://doi.org/10.1109/TMTT.2025.3532810

[22] Paul, B., Sertel, K., & Nahar, N. K. (2022). Photonic beamforming for 5G and beyond: A review of true time delay devices enabling ultra-wideband beamforming for mmWave communications. *IEEE Access*, *10*, 75513–75526. https://doi.org/10.1109/ACCESS.2022.3188992

[23] Lim, C. S., & Yao, J. (2012). Photonics-based true-timedelay beamforming system incorporating tunable wavelength selection. *Optics Letters*, *37*(16), 3456–3458. https://doi.org/10.1364/OL.37.003456

[24] Emami, H., & Hashemi, R. (2024). Microwave photonics doppler speed measurement based on Sagnac loops and four wave mixing effect in a highly nonlinear fiber. *Scientific Reports*, *14*, 5734. https://doi.org/10.1038/s41598-024-56470-y

[25] Shen, X. (2014). A historical review for the 50th anniversary of laser Doppler velocimetry. *Journal of Experiments in Fluid Mechanics*, *28*(6), 51–55. https://doi.org/10.11729/syltlx20140011

[26] Boutier, A., & Most, J. (2012). Laser Doppler velocimetry. In A. Boutier (Ed.), *Laser velocimetry in fluid mechanics* (pp. 33–138). Wiley. https://doi.org/10.1002/9781118569610.ch3

[27] Beauvais, R. (1994). Laser-Doppler velocimetry (LDV). In F. Mayinger (Ed.), *Optical measurements* (pp. 363–412). Springer. https://doi.org/10.1007/978-3-662-02967-1_10

[28] Chu, A. (2005). Sensors for mechanical shock. In T. Shanmugam (Ed.), *Sensor technology handbook* (pp. 457–480). Elsevier. https://doi.org/10.1016/B978-075067729-5/50057-4

[29] Zvyagin, A. V., FitzGerald, J. B., Silva, K. K. M. B. D., & Sampson, D. D. (2000). Real-time detection technique for Doppler optical coherence tomography. *Optics Letters*, *25*(22), 1645–1647. https://doi.org/10.1364/OL.25.001645

[30] Cai, J., Chang, X., Liu, W., Shang, T., & Li, C. (2021). Photonic direction-of-arrival estimation based on compressive

sensing. *Applied Optics*, *60*(12), 3482–3486. https://doi.org/10.1364/AO.418897

[31] Zelaya, K., & Miri, M.-A. (2025). Photonic matrix multiplier makes a direction-finding sensor. *Optics Express*, *33*(6), 8396–8409. https://doi.org/10.1364/OE.549211

[32] Liu, Y., Zhou, Z., Lu, Y., Yang, B., Yang, S., Zhai, Y., . . . , & Chi, H. (2025). Photonic heterodyne mixing for angle of arrival estimation without direction ambiguity. *Optics Communications*, *585*, 131810. https://doi.org/10.1016/j.optcom.2025.131810

[33] Shahbaz, M., Butt, M. A., & Piramidowicz, R. (2023). A concise review of the progress in photonic sensing devices. *Photonics*, *10*(6), 698. https://doi.org/10.3390/photonics10060698

[34] Butt, M. A., Voronkov, G. S., Grakhova, E. P., Kutluyarov, R. V., Kazanskiy, N. L., & Khonina, S. N. (2022). Environmental monitoring: A comprehensive review on optical waveguide and fiber-based sensors. *Biosensors*, *12*(11), 1038. https://doi.org/10.3390/bios12111038

[35] Kong, Z., Fei, R., Cheng, Y., Wang, X., Xu, N., Wang, Z., . . . , & Mei, L. (2025). Imaging-based lidar for atmospheric remote sensing: A review. *Optics & Laser Technology*, *191*, 113354. https://doi.org/10.1016/j.optlastec.2025.113354

[36] Butt, M. A., Mateos, X., & Piramidowicz, R. (2024). Photonics sensors: A perspective on current advancements, emerging challenges, and potential solutions. *Physics Letters A*, *516*, 129633. https://doi.org/10.1016/j.physleta.2024.129633

[37] Khodadadzadeh, M., Li, J., Prasad, S., & Plaza, A. (2015). Fusion of hyperspectral and LiDAR remote sensing data using multiple feature learning. *IEEE Journal of Selected Topics in Applied Earth Observations and Remote Sensing*, *8*(6), 2971–2983. https://doi.org/10.1109/JSTARS.2015.2432037

[38] Karyotis, K., Tsakiridis, N. L., Tziolas, N., Samarinas, N., Kalopesa, E., Chatzimisios, P., & Zalidis, G. (2023). On-site soil monitoring using photonics-based sensors and historical soil spectral libraries. *Remote Sensing*, *15*(6), 1624. https://doi.org/10.3390/rs15061624

[39] Jones, L., & Hobbs, P. (2021). The application of terrestrial LiDAR for geohazard mapping, monitoring and modelling in the British Geological Survey. *Remote Sensing*, *13*(3), 395. https://doi.org/10.3390/rs13030395

[40] Muhadi, N. A., Abdullah, A. F., Bejo, S. K., Mahadi, M. R., & Mijic, A. (2020). The use of LiDAR derived DEM in flood applications: A review. *Remote Sensing*, *12*(14), 2308. https://doi.org/10.3390/rs12142308

[41] De Leon, A. F., & Cruz, F. R. G. (2021). Water level monitoring and flood warning system using light detection and ranging (LiDAR) sensor with hybrid renewable solar-wind power. In *IEEE 13th International Conference on Humanoid, Nanotechnology, Information Technology, Communication and Control, Environment, and Management*, 1–5. https://doi.org/10.1109/HNICEM54116.2021.9731998

[42] Deng, Y., Yu, W., Wang, P., Xiao, D., Wang, W., Liu, K., & Zhang, H. (2024). The high-resolution synthetic aperture radar system and signal processing techniques: Current progress and future. *IEEE Geoscience and Remote Sensing Magazine*, *12*(4), 169–189. https://doi.org/10.1109/MGRS.2024.3456444

[43] Lin, B., Qian, N., Zhao, Y., Wang, B., Yang, W., Li, X., & Zou, W. (2026). Multi-band converged high-resolution ISAR based on photonic ADC reception. *Optics Letters*, *51*(10), 2868–2871. https://doi.org/10.1364/OL.600877

[44] Feng, F., Huo, D., Zang, Z., Lou, Y., Wang, S., Gu, Z., . . . , & Yuan, X. (2025). Symbiotic evolution of photonics and artificial intelligence: A comprehensive review. *Advanced Photonics*, *7*(2), 024001. https://doi.org/10.1117/1.AP.7.2.024001

[45] Manoharan, D. (2025). Artificial intelligence in remote sensing: Advancements, challenges, and future directions for sustainable applications. *Advances in Research*, *26*(3), 468–478. https://doi.org/10.9734/air/2025/v26i31363

[46] Qin, K., Liu, S., Wu, W., Yin, H., Guo, T., & Xia, M. (2026). SpecGateNet: Spectral-guided fusion network for cloud and cloud shadow segmentation in optical remote sensing imagery. *Remote Sensing*, *18*(15), 2469. https://doi.org/10.3390/rs18152469

[47] Xiao, X., Xiang, X., Wang, J., Wang, L., Gao, X., Chen, Y., . . . , & Li, Z. (2025). A multi-scale windowed spatial and channel attention network for high-fidelity remote sensing image super-resolution. *Remote Sensing*, *17*(21), 3653. https://doi.org/10.3390/rs17213653

[48] Kopeika, N., & Raj, A. A. B. (2023). Editorial—Special issue on "Optical and RF atmospheric propagation". *Sensors*, *23*(7), 3644. https://doi.org/10.3390/s23073644

[49] Chen, Z., Hao, Y., Liu, Q., Liu, Y., Zhu, M., & Xiao, L. (2024). Deep learning for hyperspectral image classification: A critical evaluation via mutation testing. *Remote Sensing*, *16*(24), 4695. https://doi.org/10.3390/rs16244695

[50] Bhargava, A., Sachdeva, A., Sharma, K., Alsharif, M. H., Uthansakul, P., & Uthansakul, M. (2024). Hyperspectral imaging and its applications: A review. *Heliyon*, *10*(12), e33208. https://doi.org/10.1016/j.heliyon.2024.e33208

[51] Tian, Y., Zhang, Y., & Zhang, H. (2023). Recent advances in stochastic gradient descent in deep learning. *Mathematics*, *11*(3), 682. https://doi.org/10.3390/math11030682

[52] Manojlović, T., Tomanič, T., Štajduhar, I., & Milanič, M. (2023). Rapid extraction of skin physiological parameters from hyperspectral images using machine learning. *Applied Intelligence*, *53*, 16519–16539. https://doi.org/10.1007/s10489-022-04327-0

[53] Guerri, M. F., Distante, C., Spagnolo, P., Bougourzi, F., & Taleb-Ahmed, A. (2024). Deep learning techniques for hyperspectral image analysis in agriculture: A review. *ISPRS Open Journal of Photogrammetry and Remote Sensing*, *12*, 100062. https://doi.org/10.1016/j.ophoto.2024.100062

[54] Chen, Z., Zeng, Z., Shen, H., Zheng, X., Dai, P., & Ouyang, P. (2020). DN-GAN: Denoising generative adversarial networks for speckle noise reduction in optical coherence tomography images. *Biomedical Signal Processing and Control*, *55*, 101632. https://doi.org/10.1016/j.bspc.2019.101632

[55] Freire, P., Manuylovich, E., Prilepsky, J., & Turitsyn, S. (2023). Artificial neural networks for photonic applications—from algorithms to implementation: Tutorial. *Advances in Optics and Photonics*, *15*(3), 739–834. https://doi.org/10.1364/AOP.488340

[56] Ding, Q.-A., Li, J., Liu, H., Cheng, X., Liang, A., Du, L., . . . , & Li, J. (2022). Instantaneous frequency measurement with reasonable resolution and simple structure. *Photonics*, *9*(10), 685. https://doi.org/10.3390/photonics9100685

[57] Tang, Z., Zhou, P., Zhu, J., & Li, N. (2022). Photonics-based microwave frequency measurement with broadband signal generation and processing. In *Asia Communications and Photonics Conference*, 1785–1788. https://doi.org/10.1109/ACP55869.2022.10089030

[58] Zou, X., Lu, B., Pan, W., Yan, L., Stöhr, A., & Yao, J. (2016). Photonics for microwave measurements. *Laser & Photonics Reviews*, *10*(5), 711–734. https://doi.org/10.1002/lpor.201600019

[59] Li, X., Wen, A., Li, X., Mo, Y., & Zhuo, H. (2021). Photonic instantaneous frequency measurement using a dense wavelength-division multiplexer. *Applied Optics*, *60*(27), 8286–8291. https://doi.org/10.1364/AO.434579

[60] Zou, X., Pan, W., Luo, B., & Yan, L. (2010). Full-scale phase demodulation approach for photonic instantaneous frequency measurement. *Optics Letters*, *35*(16), 2747–2749. https://doi.org/10.1364/OL.35.002747

[61] Wang, R., & Li, Y. (2025). Power-independent microwave photonic instantaneous frequency measurement system. *Sensors*, *25*(14), 4382. https://doi.org/10.3390/s25144382

[62] Zhang, Z., Zong, J., Qin, W., Li, S., Hu, J., & He, J. (2025). Advanced optical electric field sensor. *CSEE Journal of Power and Energy Systems*, *11*(2), 1–18. https://doi.org/10.17775/CSEEJPES.2024.08360

[63] Butt, M. A., Kazanskiy, N. L., Khonina, S. N., Voronkov, G. S., Grakhova, E. P., & Kutluyarov, R. V. (2023). A review on photonic sensing technologies: Status and outlook. *Biosensors*, *13*(5), 568. https://doi.org/10.3390/bios13050568

[64] Sibley, M. (2020). *Optical communications*. Springer. https://doi.org/10.1007/978-3-030-34359-0

[65] Bohnert, K., Gabus, P., Kostovic, J., & Brändle, H. (2005). Optical fiber sensors for the electric power industry. *Optics and Lasers in Engineering*, *43*(3–5), 511–526. https://doi.org/10.1016/j.optlaseng.2004.02.008

[66] Rose, A., Etzel, S., & Rochford, K. (1999). Optical fiber current sensors in high electric field environments. *Journal of Lightwave Technology*, *17*(6), 1042–1048. https://doi.org/10.1109/50.769306

[67] Huang, C., Zhang, H., Zhi, K., Hao, P., Wu, S., & Chan, E. H. W. (2025). Simple photonics-based microwave frequency and power measurement system. *Optics Express*, *33*(12), 24647–24661. https://doi.org/10.1364/OE.550320

[68] Wojtas, J. (2022). Photonic technology for precision metrology. *Applied Sciences*, *12*(8), 4022. https://doi.org/10.3390/app12084022

[69] Liang, J. (2025). Advancements in photonic integrated circuits. In *Proceedings of CONF-FMCE 2025 Symposium: Semantic Communication for Media Compression and Transmission*, 1–8. https://doi.org/10.54254/2755-2721/2025.GL28750

[70] Tyndall, N. F., Sunderman, C. E., Diehl, J. F., Pruessner, M. W., Walsh, K. J., Lipkowitz, S. T., . . . , & Stievater, T. H. (2025). Photonic integrated circuits for microwave photonics in a 300-mm silicon photonics foundry. *Optical Engineering*, *64*(5), 057103. https://doi.org/10.1117/1.OE.64.5.057103

[71] Velamuri, A., Piyush, K., Raj, Y., Goswami, A., Padmanabhan, A., Ghodgaonkar, N., . . . , & Das, B. K. (2025). Demonstration and performance evaluation of reconfigurable multiband microwave filters using a programmable photonic integrated circuit. *Photonics Research*, *13*(10), 3341–3361. https://doi.org/10.1364/PRJ.566383

[72] Zheng, Y., Han, Z., Wang, L., Zhang, P., Jiang, Y., Xiao, H., . . . , & Tian, Y. (2025). Integrated microwave photonics multi-parameter measurement system. *Laser & Photonics Reviews*, *19*(14), 2500013. https://doi.org/10.1002/lpor.202500013

[73] Yuan, Z., Shi, W., Yuan, D., Wang, X., Li, S., & Pan, S. (2026). Microwave photonic angle-of-arrival measurement based on wavelength-selective modulation chip. In *Eleventh Symposium on Novel Optoelectronic Detection Technology and Applications, 14177,* 141778D. https://doi.org/10.1117/12.3109707

How to Cite: Suhas, R. P., Arockia Bazil Raj, A., Gowda, N. R., Shanmugasundaram, T., Satapathy, A., Tupe, K., & Babu, S. P. K. (2026). Photonics for Remote Sensing and Microwave Measurement Applications: A Review. *Journal of Optics and Photonics Research*. https://doi.org/10.47852/bonviewJOPR62028177